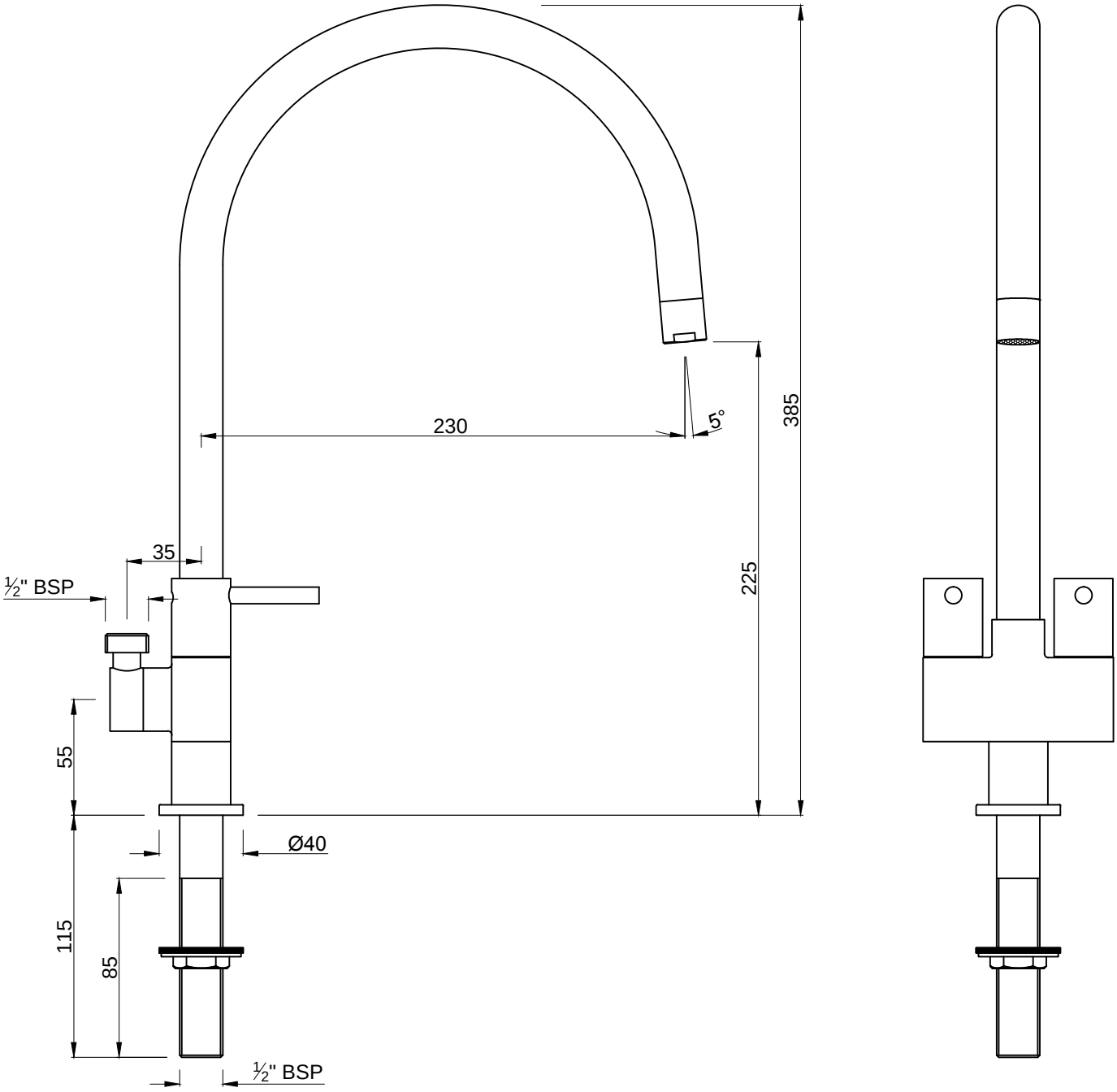Sink cock with provision for connection to R.O. from rear side & swinging spout	Cat. No.-FLR-5355N